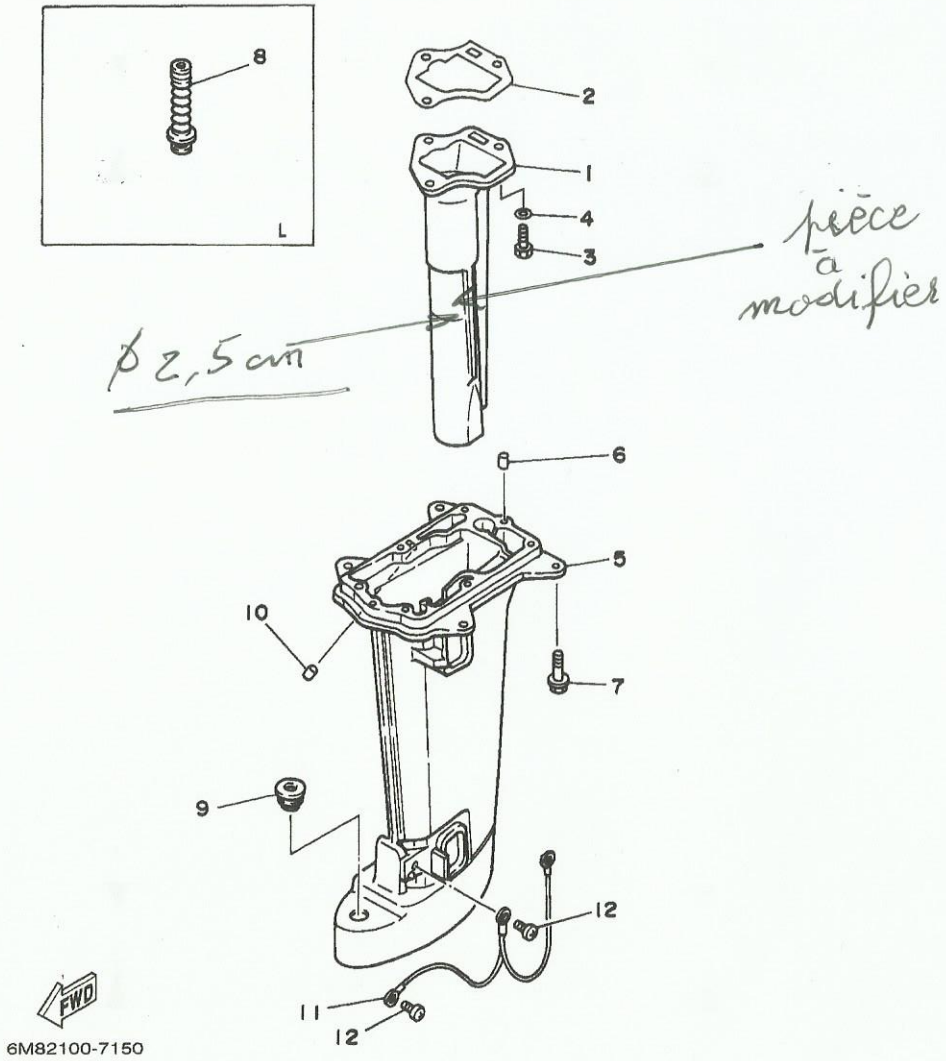

FIG. 14 UPPER CASING FOURREAU

REF. NO.	PART NO. N° PIECES	DESCRIPTION DESCRIPTION	6M85	6M95	6N05			REMARKS REMARQUES
1	6M8-G1131-00-5B	MANIFOLD, EXT. 1 8cV PIPE D'ECHAPPEMENT	1					
	6M9-G1131-00-5B	MANIFOLD, EXT. 1 PIPE D'ECHAPPEMENT		1				
	6N0-G1131-00-5B	MANIFOLD, EXT. 1 6cV PIPE D'ECHAPPEMENT			1			
2	6G1-41133-A0	GASKET, EXHAUST MANIFOLD 1 JOINT, PIPE D'ECHAPPEMENT	1	1	1			
3	97095-06020	BOLT BOULON	3	3	3			
4	92995-06600	WASHER RONDELLE	3	3	3			
5	6N0-G5111-00-4D	CASING, UPPER FOURREAU	1	1	1			S (17.2") S (17.2")
	6N0-G5111-10-4D	CASING, UPPER FOURREAU	1	1	1			L (22.2") L (22.2")
6	93604-08062	PIN, DOWEL CLAVETTE	2	2	2			
7	95895-06030	BOLT, FLANGE BOULON	6	6	6			
8	655-44147-00	BOOT, SHIFT ROD SOUFFLET, TIGE D'INVERSION	1	1	1			L (22.2") L (22.2")
9	90480-20M29	GROMMET PASSE-FIL	1	1	1			S (17.2") S (17.2")
10	6G1-45135-00	PIPE TUYAU	1	1	1			
11	6G1-82149-00	WIRE, LEAD 3 FIL 3	1	1	1			
12	97885-06008	SCREW, PAN HEAD VIS, A ENCOCHE	2	2	2			